REV	ZONE	REVISION RECORD	AUTHORITY	DATE
D		ECO 2172	LVC	2-92

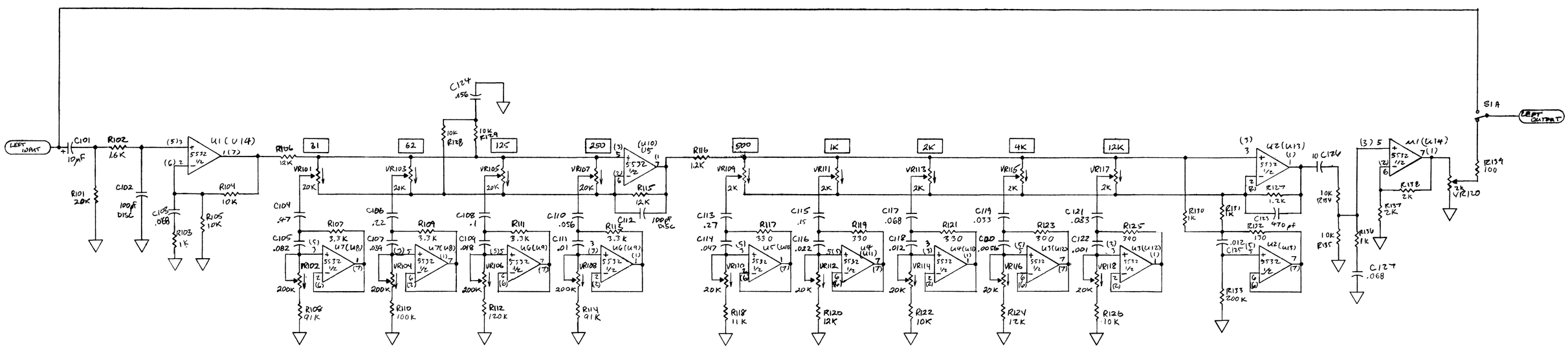

DUPLICATE FOR
RIGHT CHANNEL CIRCUIT
R201-234
VR201-219
C201-227
S1B

RIGHT CHANNEL I.C.'S
IN PARENTHESES

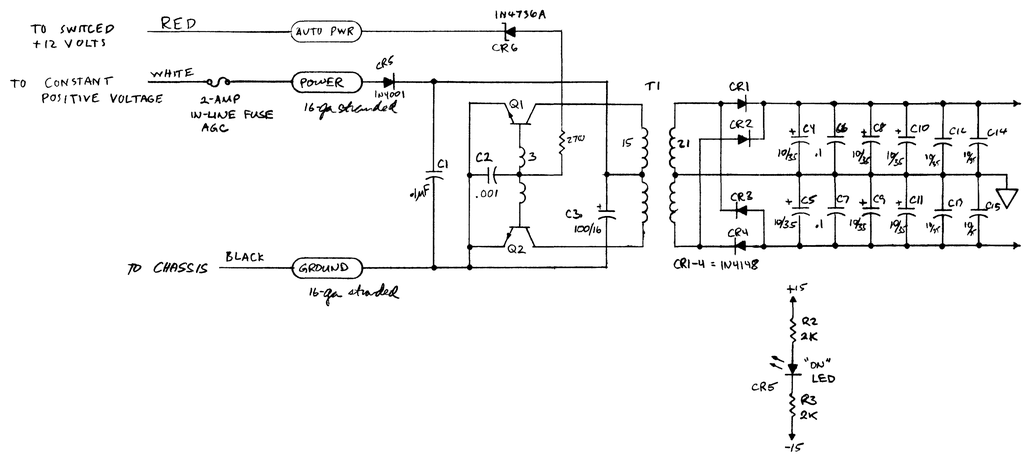

DWN		
CHK		
ENGR	CLIFFORD	5/91
APVD		9/19/92
APVD		2-12-92
MATL/FS		

ROCKFORD CORP TEMPE ARIZONA

SCALE: —— SCH-OEQ1 DRAWN BY FRANCE

DATE: REVISED 7/26/89

OCTAVE EQUALIZER SCHEMATIC

DRAWING NUMBER